SPEND50-L15

Direct | Indirect, Linkable, Low Glare Pendant

Introducing the Spend50 linear pendant with innovative optical ultra-low glare features. Each luminaire offers up/down illumination, with a removable up-light module. The Spend50 can be suspended, surface mounted, and is able to be linked together up to 400Ws. Everything you need is included in each pendant box when you purchase. If you need to change the colour temperature to suit your space this can be changed via a dip switch on the fitting.

General

Product Codes

SPEND50-L15-BLK
SPEND50-L15-WH

Weight

Dimensions

50mm W x 1500mm L x 72mm H

Mounting Options

Wire Suspended
Surface Mounted
Ceiling Rose: 90 x 30 mm
Anchor Points: 2
**Note: Each pendant supplied with linkable connector, surafce & suspension kits*

Finish Options

Material : Aluminium
Body Colour: Black
White

Environmental

IP20

Product Image

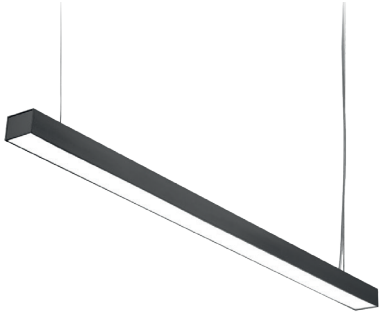

Product Illustration

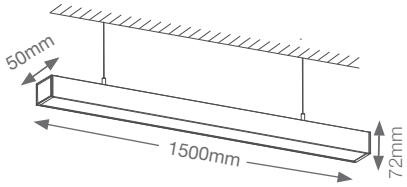

Electrical

Ambient Operating Temperature

Power Consumption

50W

Luminous Efficacy

110 lm/W

Lumen Maintenance

50,000 hours (L70)

Dimming Options

Not dimmable

Photometrics

Flux

>4700lm @ 3000K
(>3000lm down only)

Optics

Microprismatic Lens Diffuser

Light Source

Integrated SMD LED

Correlated Colour Temperature (CCT)

3000K or 4000K
(CCT Switchable)

Colour Rendering Index (CRI)

CRI >90

Light Distribution Diagram

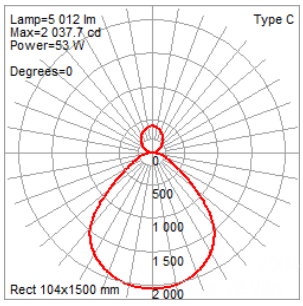

Light Distribution Render

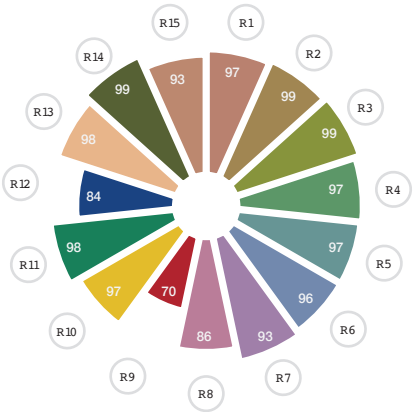

Draco Rectangle Bollard

Model: RB702-6003K

Installation Instructions

All installations must be carried out by a qualified electrician following local regulations. Make sure that the power is switched off before installation. Please read and follow the 'Installation instructions' and 'Safety instructions' sections carefully before commencing installation. Installation of this model can change from time to time please read instructions every time before installation.

For detailed specification, please go to our website eurotechlighting.co.nz

Code:	Colour:	Dimensions (mm):	IP Rating:	IK Rating:	Voltage:	Material:
RB702-6003K	Black	50W x 60D x 700H	IP54	IK08	17W (2 x 8.5W)	Pre-treated corrosion resistant aluminium with electrophoretic coating

Installation Instructions

1. Turn off the power.
2. Take out of the box and disconnect parts.
3. Fit the bolts to the 2 holes in the mounting bracket and secure bolts in the ground. Make sure you allow enough cable to reach the connector block. Ensure waterproof connector block is tight, no missing washers, impervious to moisture.
4. Lock the pole of the bollard into mounting bracket with provided allen key screws and run through the cable through the centre of the bracket.
5. Unscrew the terminal block.
6. Connect the mains supply to the terminal block, using the following colour code for the wiring:
   Connect the brown (Live) wire to the corresponding terminal on the terminal block marked L.
   Connect the blue (Neutral) wire to the corresponding terminal on the terminal block marked N.
7. Enclose and screw in the terminal block.
8. Attached the bollard to the mounting bracket.
9. Turn on the power.

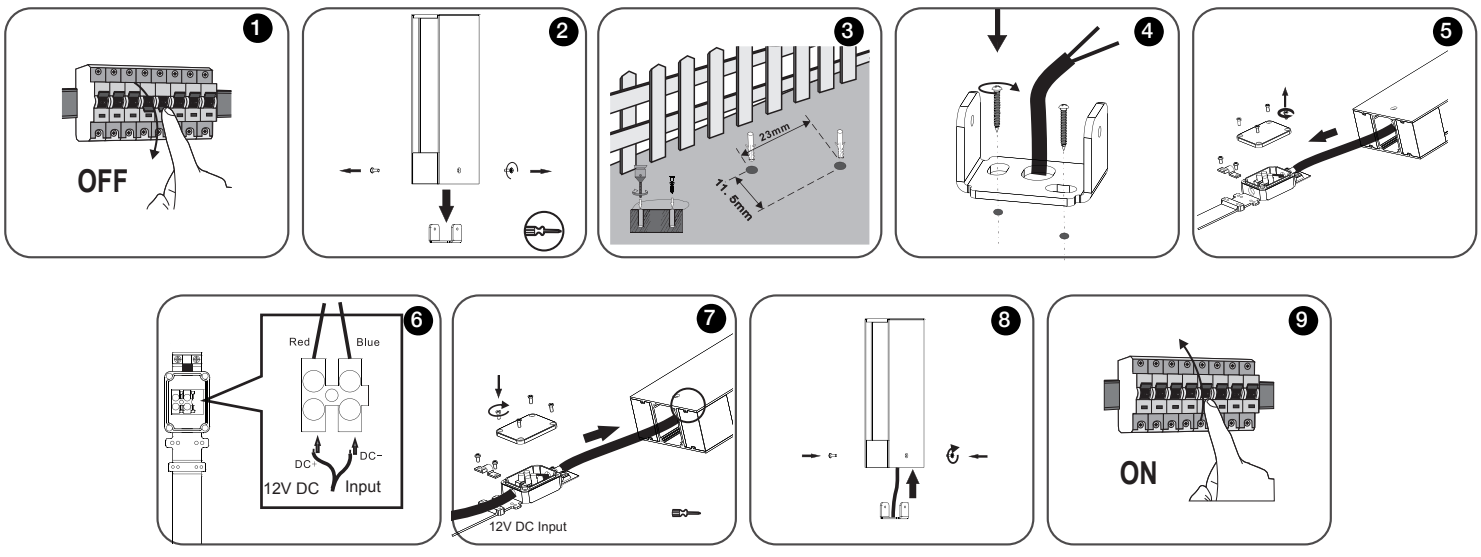

Safety Instructions

Read these instructions carefully before commencing installation.

1. This LED luminaire must be installed by a licensed electrician ONLY following all local regulations.
2. Ensure that the cables will not be squeezed or damaged by sharp edges.
3. Clean the light with a soft cloth and a standard PH-neutral detergent.
4. Misuse of/or changes to the appliance shall void all warranties.
5. Do not install on a surface that is not suitable or deformed.
6. Do not install on or above a surface with a high temperature.
7. There should not be any materials that are corrosive, explosive.

Callista - LED Mirror Light Range

Model: BM9020, BM9060, BM6060, BM4214

Installation Instructions

All installations must be carried out by a qualified electrician following local regulations. Make sure that the power is switched off before installation.

Please read and follow the 'Installation instructions' and 'Safety instructions' sections carefully before commencing installation.

Installation of this model can change from time to time please read instructions every time before installation. For detailed specification, please go to our website eurotechlighting.co.nz

Product Information



BM9020 - Product Visual



BM4214 - Product Visual



BM6060 - Product Visual

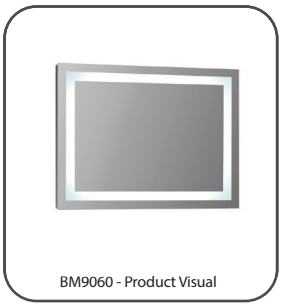

BM9060 - Product Visual

Installation Instructions | Hanging Bar Method

1. Make sure the power is turned off
2. Level the hanging by marking with a pencil in the hanging bar hole.
3. Use a drill to make the holes
4. Put the extension plug into the wall hole so both the wall holes and the hanging bar holes match. Securely screw hanging bar to wall.
5. Connect the wiring as per the below instructions.
6. Hang up the mirror. Check it is secure.
7. Turn power on & carry out required testing.

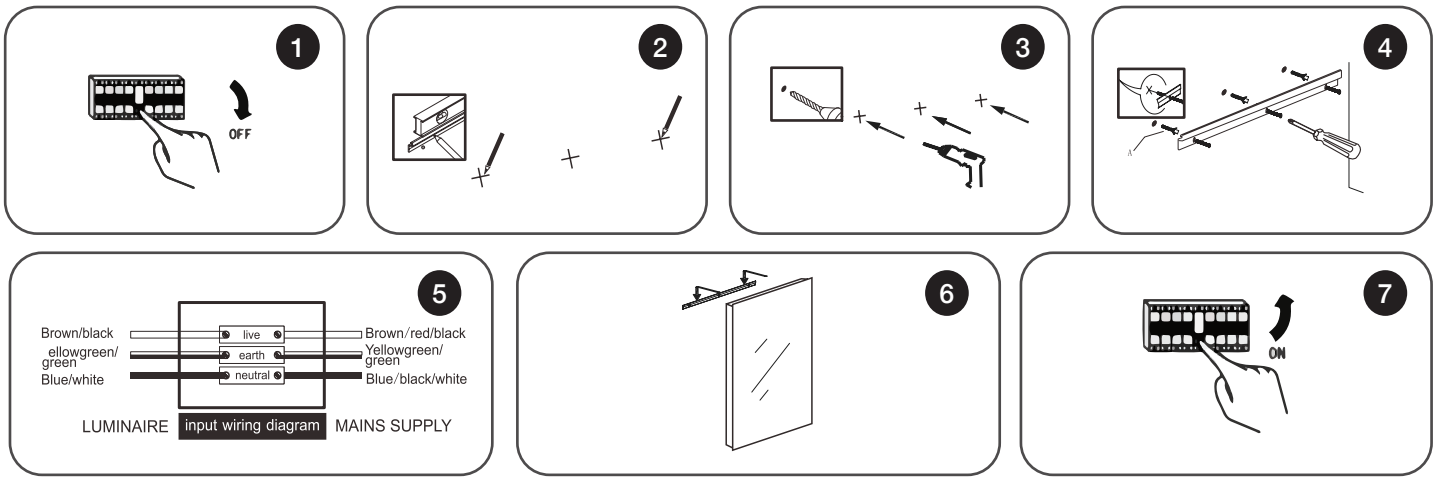

Safety Instructions

Read these instructions carefully before commencing installation.

1. The light source contained in this luminaire shall only be replaced by the manufacturer or this service agent or a similar qualified person.
2. This LED luminaire must be installed by a licensed electrician ONLY following all local regulations.
3. Ensure that the cables will not be squeezed or damaged by sharp edges.
4. Clean the light with a soft cloth and a standard PH-neutral detergent.
5. Misuse of/or changes to the appliance shall void all warranties.
6. Do not install on a surface that is not suitable or deformed.
7. Do not install on or above a surface with a high temperature.
8. There should not be any materials that are corrosive, explosive.

Callista - LED Mirror Light Range

Model: BM9020, BM9060, BM6060, BM4214

Installation Instructions

All installations must be carried out by a qualified electrician following local regulations. Make sure that the power is switched off before installation.

Please read and follow the 'Installation instructions' and 'Safety instructions' sections carefully before commencing installation.

Installation of this model can change from time to time please read instructions every time before installation. For detailed specification, please go to our website eurotechlighting.co.nz

Product Information



BM9020 - Product Visual



BM4214 - Product Visual



BM6060 - Product Visual

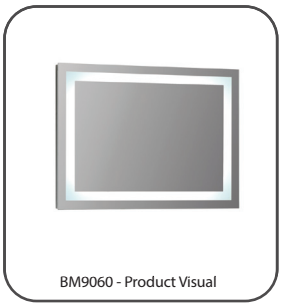

BM9060 - Product Visual

Installation Instructions - Hardy Holes Method

1. Make sure the power is turned off
2. Choose portrait or landscape installation first. Use a measuring tape to measure the distance between the two holes.
3. Using a level, mark the distance between the two holes. Use a drill to make the holes
4. Put the extension plug into the wall hole so both the wall holes and the hanging bar holes match. Securely screw hanging bar to wall.
5. Connect the wiring as per the below instructions.
6. Hang up the mirror, check it is secure.
7. Turn power on & carry out required testing.

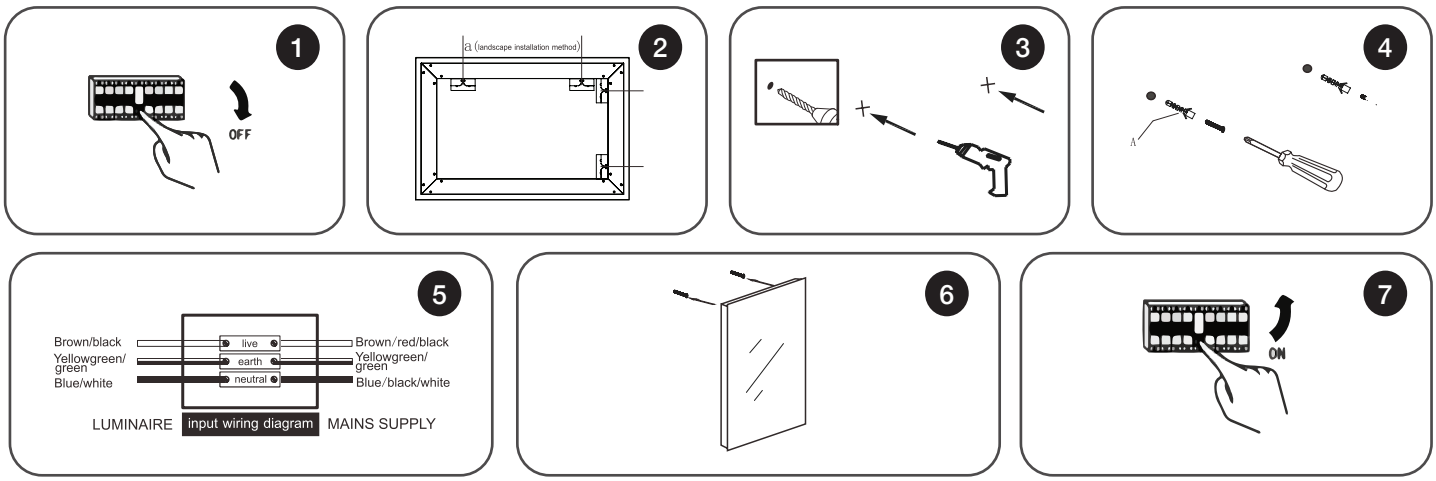

Safety Instructions

Read these instructions carefully before commencing installation.

1. The light source contained in this luminaire shall only be replaced by the manufacturer or this service agent or a similar qualified person.
2. This LED luminaire must be installed by a licensed electrician ONLY following all local regulations.
3. Ensure that the cables will not be squeezed or damaged by sharp edges.
4. Clean the light with a soft cloth and a standard PH-neutral detergent.
5. Misuse of/or changes to the appliance shall void all warranties.
6. Do not install on a surface that is not suitable or deformed.
7. Do not install on or above a surface with a high temperature.
8. There should not be any materials that are corrosive, explosive.